A CMOS 65nm UHF Bandpass Filter Employing Active Inductor for Small-Satellites

Raul P. de Oliveira, Tailize C. de-Oliveira, Paulo C. C. de Aguirre, Alessandro G. Girardi and Lucas Compassi-Severo

***Abstract*— The active inductor (AI) is a promising strategy for use in analog receiver filters applied to aerospace devices, as it occupies a smaller silicon area. This paper presents the preliminary design of an AI implemented in a 65-nm CMOS process, which obtained an L of 14.97 nH with a quality factor of 3.7. It was employed to implement an L-C band-pass filter at 401.5 MHz intended for small-satellite RF receivers. The power consumed by the complete circuit was 1.08 mW at 1.2 V.**

***Keywords*— UHF, bandpass-filter, active inductor, aerospace applications.**

I. Introduction

Small aerospace systems, such as pico and nano-satellites, are very used today due to the reduced cost and their applicability. Miniaturized circuit implementations are very demanding in these applications to make it possible to embed a complete system in a small area with reduced weight.

The RF communication sub-system is one of the main parts of a small satellite and also is one of the most complex systems. These systems normally operate at the UHF frequencies band (400-403 MHz) in which it is very challenging to implement distributed microwave circuits due to their size and also RF integrated circuits (RFICs) present poor performance of the magnetic elements at this frequency band.

In RFICs, inductors are key elements, since they are used in the development of analog blocks of transceiver systems, such as low-noise amplifiers, RF transformers and filters [4]. The design of passive inductors often becomes challenging, as they occupy a considerable area of silicon and require special technology, such as thicker metal layers or a high resistivity substrate.

However, the inductive behavior in frequency can be synthesized using active inductors (AIs), occupying only 1 to 10% of the area of passive inductors. They are designed from the theory of gyrator, which consists of two transconductors in a back-to-back connection [3]. Additionally, the AIs can operate in a wide frequency range and can also be continuously compensated under process and temperature variations [5]. This paper presents preliminary results of the design of an active inductor-based bandpass filter intended to be used in small-satellite RF receivers. This circuit was designed in a CMOS 65 nm process to work with 1.2 V at the UHF band. As shown in Fig. 1 the proposed filter aims to be used in an RF front-end, between the low noise amplifier (LNA) and the mixer circuit.

{Raul P. de Oliveira; Tailize C. de-Oliveira; Paulo C. C. de Aguirre; Alessandro G. Girardi; Lucas Compassi-Severo}, GAMA, UNIPAMPA, Alegrete-RS, e-mail: {rauloliveira.aluno; tailizeoliveira.aluno; pauloaguirre; alessandogirardi; lucassevero}@unipampa.edu.br. This work was partially supported by CNPq (407344/2022-5).

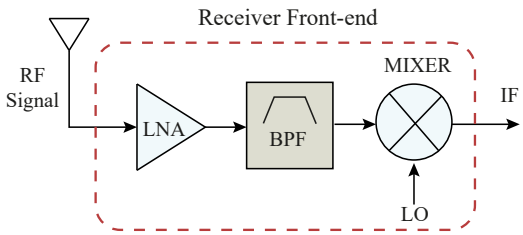

Fig. 1: Simplified block diagram of a typical RF receiver front-end.

II. Active Inductor Implementation

The proposed active inductor is designed from the theory of gyrator-C, thus, the transconductors are changed for two transistors M_1 and M_2 in the same back-to-back connection [6], as shown in Fig. 2. Transistors M_3 and M_4 work as current sources.

From small-signal model of the circuit shown in Fig. 2 is extracted the input impedance Z_{in} equation, as follows:

$$Z_{in}(s) = \frac{sC_D + A}{s^2 C_D C_X + s(C_X A + C_D B) + AB + g_m} \quad (1)$$

The total transconductance is modeled by $g_m = g_{m1} g_{m2}$, and the output conductances are defined by $A = g_{ds2} + g_{ds4}$ and $B = g_{ds1} + g_{ds3}$. And also, the parasitic capacitance C_D and C_X is given by the equation below:

$$C_D = C_{db2} + C_{gds1} + C_{gd4} + C_{db4} \quad (2)$$

$$C_X = C_{sb1} + C_{gs2} + C_{gd3} + C_{db3} \quad (3)$$

The generated inductance is given by transconductances of M_1 and M_2, therefore, this parameter is dependent on the current flow in its own transistors [2]. So, to synthesize an inductance value of $L = 14.97$ nH is needed a drain current

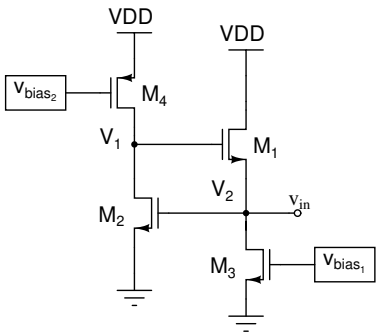

Fig. 2: Implemented active inductor topology.

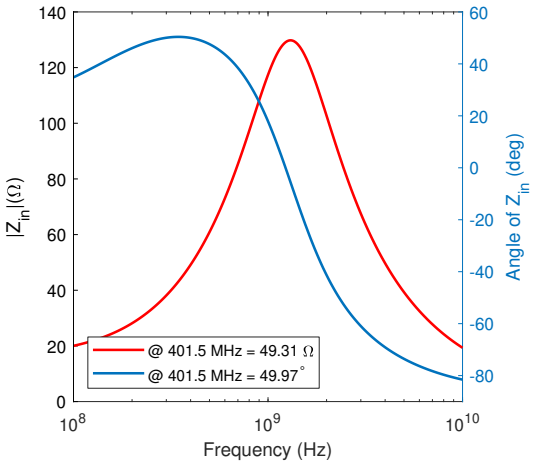

Fig. 3: Frequency response of proposed AI.

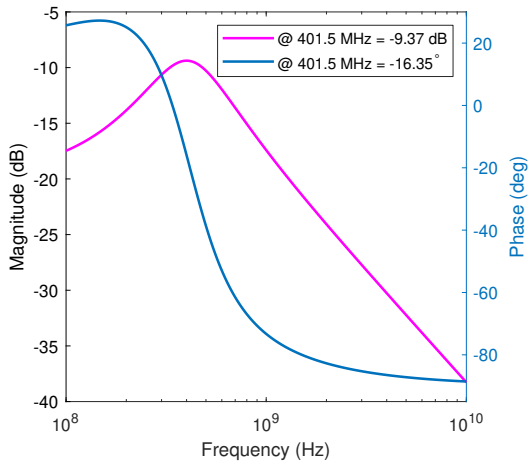

Fig. 5: Frequency response of the proposed BPF.

$I_D = 400$ μA on both branches. The current flow through of these transistors is given by the voltage biases v_{bias_1} and v_{bias_2} provided from current-mirrors.

All the four transistors has the same channel length $L = 0.50$ μm, the channel width W and multipliers of each one follows: M_1 ($W = 3.00$ μm, M = 40), M_2 ($W = 3.00$ μm, M = 40), M_3 ($W = 3.30$ μm, M = 40) and M_4 ($W = 4.20$ μm, M = 80).

The cadence virtuoso design environment ® was used to simulate the circuit and to extract the equivalent input impedance of the designed active inductor. The frequency response of the designed AI circuit with a quality factor (Q) of 13.59 and SRF of 1.3 GHz is shown in Fig. 3.

III. Proposed Bandpass Filter

The proposed UHF analog bandpass filter is designed using a simple LC resonator topology, as shown in Fig. 4. This network is composed of one inductor and one capacitor on a parallel connection [1], and the resonant frequency must be equal to 401.5 MHz, the central frequency of the 400-403 MHz band. The transfer function of the proposed filter is given by the equation below:

$$H(s) = \frac{s/(CR)}{s^2 + s/(CR) + 1/(LC)} \tag{4}$$

As the AI presents $L = 14.97$ nH, the value of C is defined to be 8.5 pF and the input resistance R to 140 Ω. The proposed

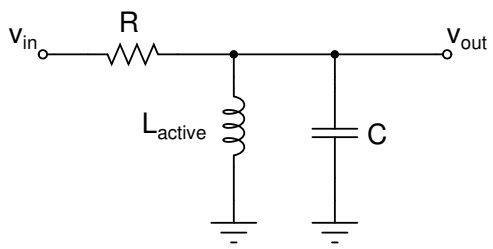

Fig. 4: Proposed band-pass filter network.

BPF reached a quality factor equal to $Q = 3.701$ and the frequency response of the filter is shown in Fig. 5. It presented an insertion loss of 9.37 dB and a bandwidth of 382 MHz (242-624 MHz).

IV. Conclusion

This paper has presented the preliminary design of a band-pass filter based on an active inductor implemented in a 65nm CMOS process. The AI implemented an inductance of 14.97 nH with Q of 13.59 at 401.5 MHz. The implemented BPF presented a bandwidth of 382 MHz with an insertion loss of 9.37 dB.

In future works, we intend to improve the active inductor circuits implementation in order to reduce the BPF insertion loss, implement a higher-order filter, and fabricate the circuit for experimental validation.

References

[1] Chris Bowick, J. Blyler, and C. J. Ajluni. *RF Circuit Design 2nd. ed.* 2008.

[2] Dhuri Rohan Suresh. "Design of CMOS Active Inductors and their use in tuned narrowband and wideband-extension Low Noise Amplifier". B.S. thesis. Universitat Politècnica de Catalunya, 2014.

[3] Alireza Saberkari et al. "Active inductor-based tunable impedance matching network for RF power amplifier application". In: *Integration* 52 (2016), pp. 301–308.

[4] Santosh Vema Krishnamurthy, Kamal El-Sankary, and Ezz El-Masry. "Noise-cancelling CMOS active inductor and its application in RF band-pass filter design". In: *International Journal of Microwave Science and Technology* 2010 (2010).

[5] Haiqiao Xiao and Rolf Schaumann. "A 5.4-GHz high-Q tunable active-inductor bandpass filter in standard digital CMOS technology". In: *Analog integrated circuits and signal processing* 51 (2007), pp. 1–9.

[6] U. Yodprasit and J. Ngarmnil. "Q-enhancing technique for rf CMOS active inductor". In: *2000 IEEE International Symposium on Circuits and Systems (ISCAS)*. Vol. 5. 2000, 589–592 vol.5.